AIRLINE™ LOUVERS

AS6S45PHM

Interior Fastening Installation

ANGLES - All corners and intermediate to extend from roof into curb.

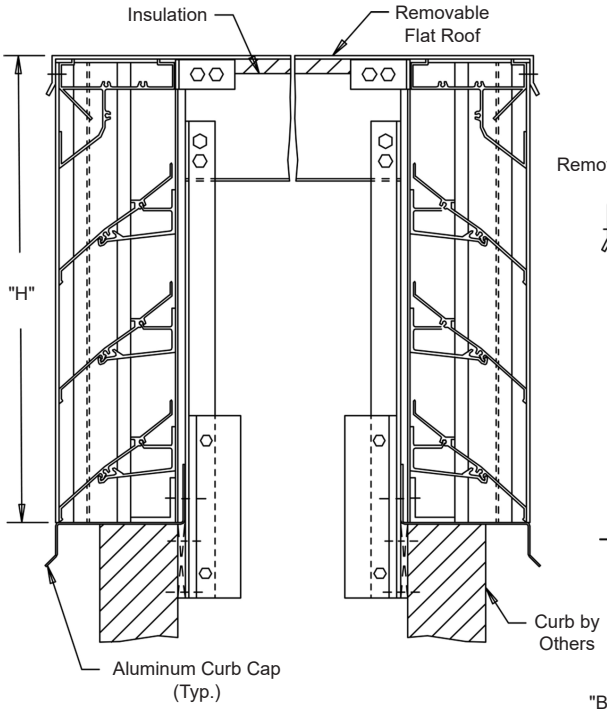

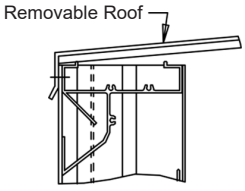

Optional Sloped Roof Available

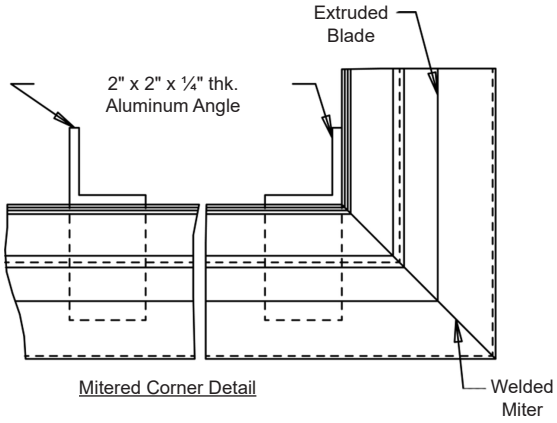

Mitered Corner Detail

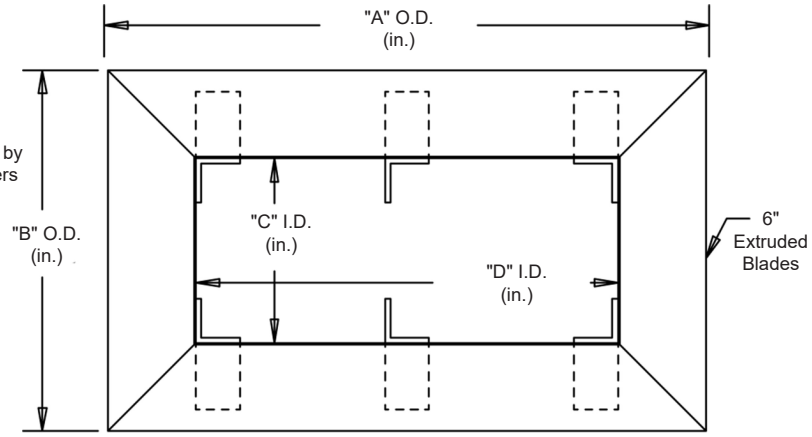

Continuous angle at the four corners and intermediate as required.

Nominal Deductions will be made to the opening size given.

In the interest of product development, Airline Louvers reserves the right to make changes without notice.

STANDARD MATERIALS AND CONSTRUCTION

MATERIAL: .081" thick (nominal) or .125" thick (nominal) extruded aluminum, 6063-T52/T6 alloy, with reinforcing rib bosses.

ROOF: .060" thick (nominal) sheet aluminum removable roof, reinforced with aluminum bracing where required to take a snow load of 40 lbs./sq.ft., plus a required safety factor.

SCREENS: (When indicated)
Bird Screen - ½" square mesh, 19 GA. galvanized steel, on interior.

INSULATION: Underside of roof is lined with ½" thick insulation.

NOTES: Penthouse dimensions "A" or "B" exceeding 84" shall be shipped in sections for field assembly by others.

Item #	**Qty**	A	B	C	D	H	**Mullion**	Type	Location		
		Penthouse Dimensions						**Screens**			**Union Made**
Arch. / Eng. :						**EDR:**		**ECN:**		**Job:**	
Contractor:											
Project:						**Date:**		**DWN:**		**DWG:**	

1020 Prince Frederick Blvd. Suite 305 • Prince Frederick, MD 20687 • Phone: (570) 420-7079 • Fax: (570) 420-7078

AIRLINE™ LOUVERS

AS6S45PHM

Exterior Fastening Installation

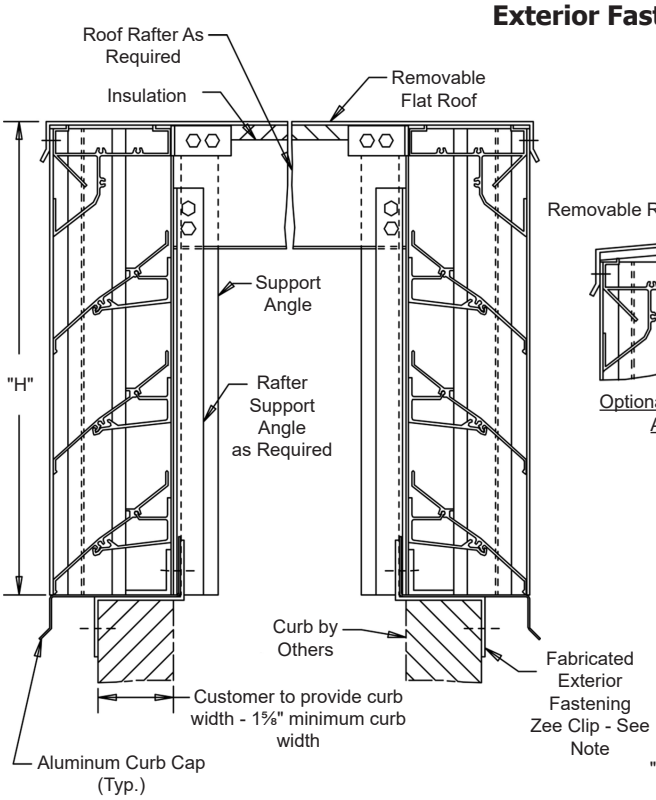

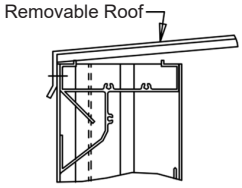

Optional Sloped Roof Available

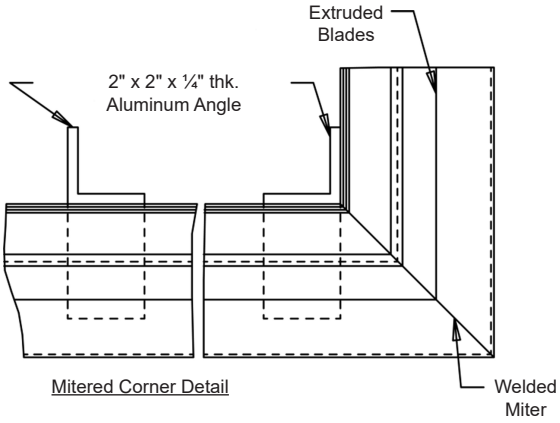

Mitered Corner Detail

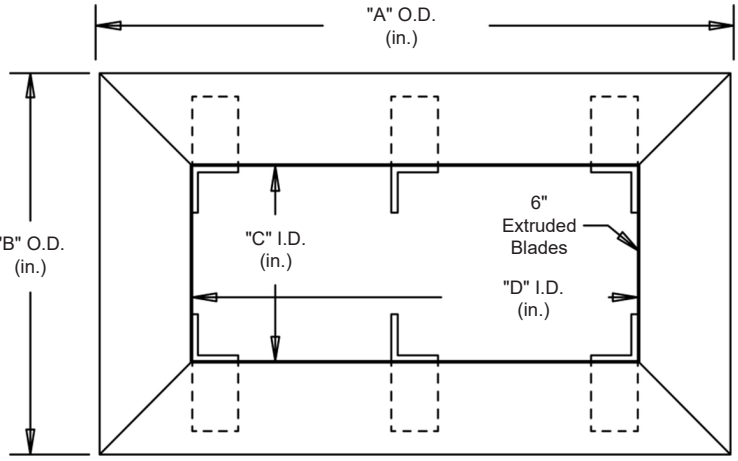

Continuous angle at the four corners and intermediate as required.

NOTE: Exterior mounting Zee Clip supplied 2" long, spaced no more than 4" from each corner and 12" O.C. maximum.

STANDARD MATERIALS AND CONSTRUCTION

MATERIAL: .081" thick (nominal) or .125" thick (nominal) extruded aluminum, 6063-T52/T6 alloy, with reinforcing rib bosses.

ROOF: .060" thick (nominal) sheet aluminum removable roof, reinforced with aluminum bracing where required to take a snow load of 40 lbs./sq.ft., plus a required safety factor.

SCREENS: (When indicated)
Bird Screen - ½" square mesh, 19 GA. galvanized steel, on interior.

INSULATION: Underside of roof is lined with ½" thick insulation.

NOTES: Penthouse dimensions "A" or "B" exceeding 84" shall be shipped in sections for field assembly by others.

Item #	**Qty**	A	B	C	D	H	**Mullion**	Type	Location		
		Penthouse Dimensions						**Screens**			**Union Made**
Arch. / Eng. :						**EDR:**		**ECN:**		**Job:**	
Contractor:											
Project:						**Date:**		**DWN:**		**DWG:**	

1020 Prince Frederick Blvd. Suite 305 • Prince Frederick, MD 20687 • Phone: (570) 420-7079 • Fax: (570) 420-7078